PARTS LIST FOR MODEL FRCIV4000

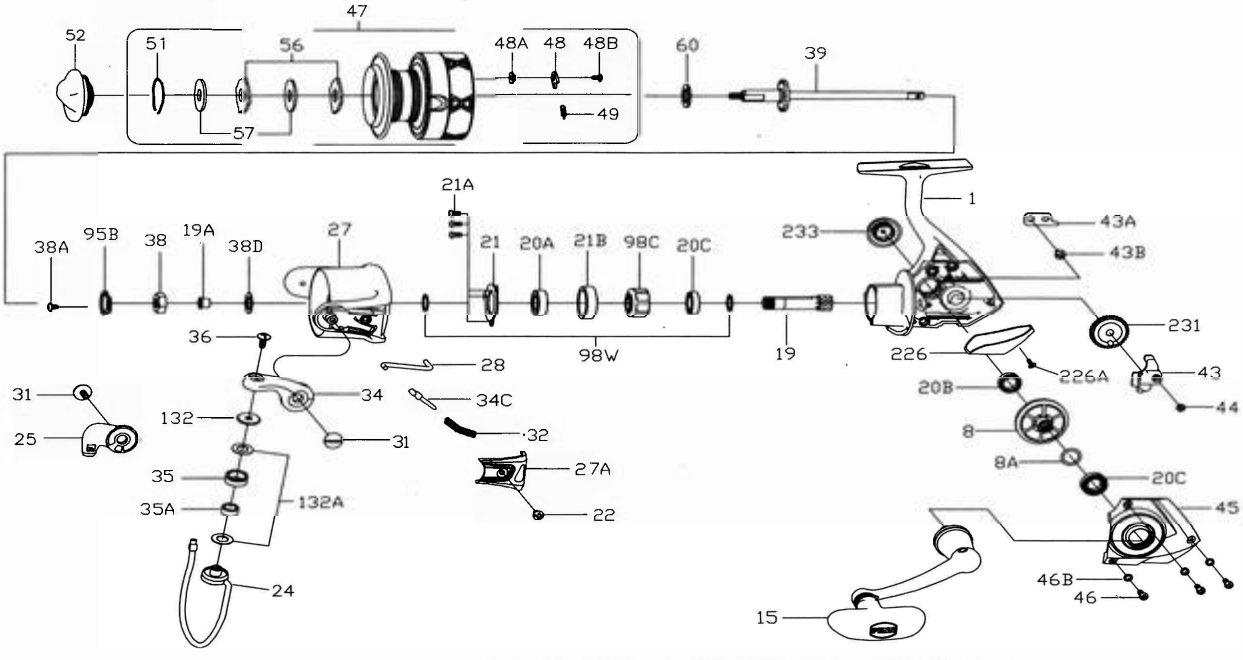

KEY NO.	PART NO.	PENN STYLE NO.	DESCRIPTION
1	1577491	1-FRCIV4000	Housing Assembly
8	1308047	8-CFT3000	Main Gear
8A	1191028	8A-3000SG	Shim
15	1578468	15-FRCIV3000	Handle Assembly
19	1191231	19-3000SG	Pinion Gear
19A	1191252	19A-3000SG	Pinion Bushing
20A	1308051	20A-CFT3000	Upper Pinion Ball Bearing
20B	1203974	20B-3000PUR	Ball Bearing
20C	1203975	20C-3000PUR	Ball Bearing(2 req)
21	1308052	21-CFT3000	Bearing Retainer
21A	1192644	21A-3000SG	Bearing Retainer Screw (3 req)
21B	1308053	21B-CFT3000	Collar
22	1203997	43B-3000PUR	Screw
24	1308055	24-CFT4000	Bail Wire
25	1308056	25-CFT3000	Bail Holder
27	1524122	27-FRCIII4000	Rotor
27A	1308060	27A-CFT4000	Bail Pivot Cover
28	1308062	28-CFT4000	Trip Lever
31	1308063	31-CFT3000	Bail Arm Screw (2 req)
32	1191586	32-3000SG	Bail Spring
34	1308064	34-CFT3000	Bail Arm
34C	1308065	34C-CFT3000	Pivot Arm
35	1308066	35-CFT3000	Line Roller
35A	1308067	35A-CFT3000	Line Roller Bushing
36	1191699	36-3000SG	Bail Stud Screw
38	1191728	38-3000SG	Rotor Nut
38A	1308069	38A-CFT3000	Rotor Locking Plate Screw
38D	1308070	38D-CFT3000	Rotor Nut Washer
39	1365731	39-FRCII4000	Main Shaft Assembly
43	1200531	43-4000SG	Crosswind Block
43A	1191818	43A-3000SG	Crosswind Block Plate
43B	1191826	43B-3000SG	Crosswind Block Plate Screw
44	1191843	44-3000SG	Crosswind Block Screw
45	1514338	45-FRCIII4000LE	Housing Cover Assy
46	1191901	46-3000SG	Housing Cover Screw (3 req)
46B	1191907	46B-3000SG	Housing Cover Washer (3 req)
47	1577492	47-FRCIV4000	Spool Assembly
48	1211604	48-3000SG	Click Tongue
48A	1214226	48A-3000SG	Click Tongue Washer
48B	1214189	48B-3000SG	Spool Click Screw
49	1211605	49-3000SG	Click Tongue Spring
51	1308078	51-CFT3000	Drag Retaining Ring
52	1514314	52-FRCIII3000	Drag Knob Assembly
56	1308080	56-CFT3000	Drag Washer (2 req)
57	1192043	57-3000SG	Keyed Washer (2 req)
60	1192060	60-3000SG	Thrust Washer
95B	1308081	95B-CFT3000	Rotor Locking Plate
98C	1308082	98C-CFT3000	Clutch/Sleeve Assembly
98W	1204004	98W-3000PUR	Clutch Washer(2 req)
132	1192296	132-3000SG	Roller Washer
132A	1192302	132A-3000SG	Line Roller Washer (2 req)
226	1308083	226-CFT3000	Rear Cover
226A	1192473	226A-3000SG	Rear Cover Screw
231	1200522	231-4000SG	Crosswind Gear
233	1514304	233-FRCIII1000	Bearing Cover Assy

407-FRCIV4000 Rev.0 24-11-2021

1558708